BHT CROSS BARS Introductory Promotion

D'ANDREA®
TECHNOLOGY FOR HIGH PRECISION

The new **BHT** boring system is characterized by the new **HT** coupling suitable for medium-heavy machining, characterized by strong torsional components with maximum concentricity.
BHT bars cover a working range from Ø 9.84" to Ø 29.53", both in roughing and finishing.
The wide range of accessories includes adjustable ISO-CA roughing cartridges and a standard TRM 63 finishing micrometric head, suitable for boring, chamfering and back-facing operations.

ARBORS **HT**
PATENTED

MAS403BT-HT8

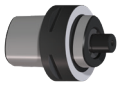
PSC80-HT8

HSK69893-HT8

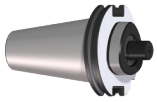
ANSI/CAT-HT8

MHD-HT8

ROUGHING

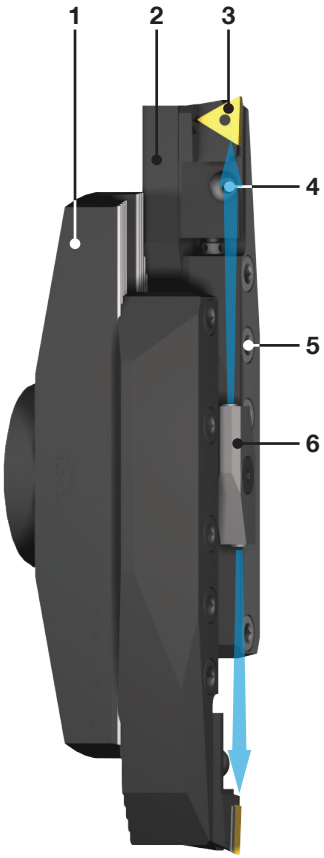

FINISHING - TURNING **.00008 µin**

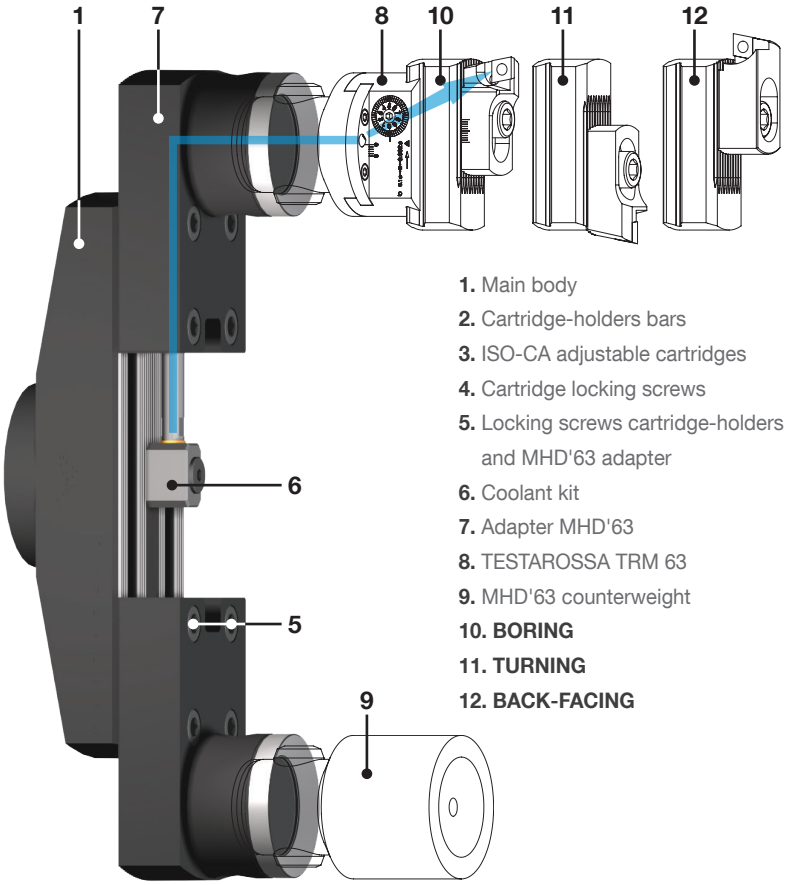

1. Main body
2. Cartridge-holders bars
3. ISO-CA adjustable cartridges
4. Cartridge locking screws
5. Locking screws cartridge-holders and MHD'63 adapter
6. Coolant kit
7. Adapter MHD'63
8. TESTAROSSA TRM 63
9. MHD'63 counterweight
10. **BORING**
11. **TURNING**
12. **BACK-FACING**

12. BACKWARD
For **ROUGHING** operations
use TS 63/63+SSQC 63 see page 25

For **FINISHING** operations
use TRM 63+PS..+SFQC 50 see page 25

REF.	CODE	Ø	A	lb	
BHT 250	435508882460	9.84 ~ 19.69	9.69	9.26	$1,598.75
BHT 500	435508882960	19.69 ~ 29.53	19.53	17.20	$2,295.00
BHT 750	435508887460	29.53 ~ 39.37	17.20		$2,995.00

REF.	CODE	lb	
DIN 69871-AD50 - HT8.36.5	41HT08025000	7.50	$399.95
MAS403BT-AD50 - HT8.38.5	41HT08035000	8.16	$399.95
PSC 80 - HT8.30	41HT08018000	4.41	$399.95
HSK 100 - HT8.76.5	41HT08041000	8.82	$469.95
ANSI/CAT50 - HT8	41HT08055000	8.16	$399.95
MHD' 80 - HT8	655108000080	4.41	$299.95

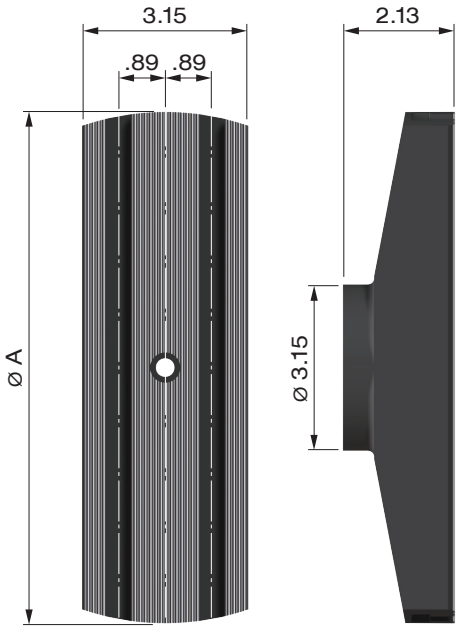

TYSON TOOL ®
75 Ormont Drive, Toronto, ON. M9L 2S3
TEL: 416.746.3688 • FAX: 416.746.5415
sales@tysontool.com • www.tysontool.com

Pricing Expires Junw 30th, 2024

BHT Ø 9.84 ~ 29.53

ROUGHING

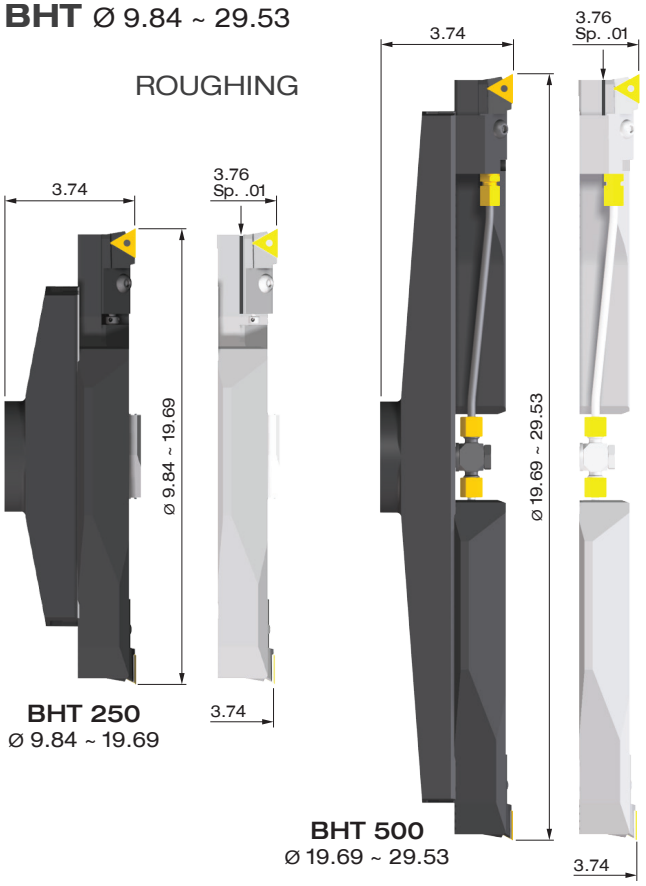

FINISHING - TURNING
.00008 µin

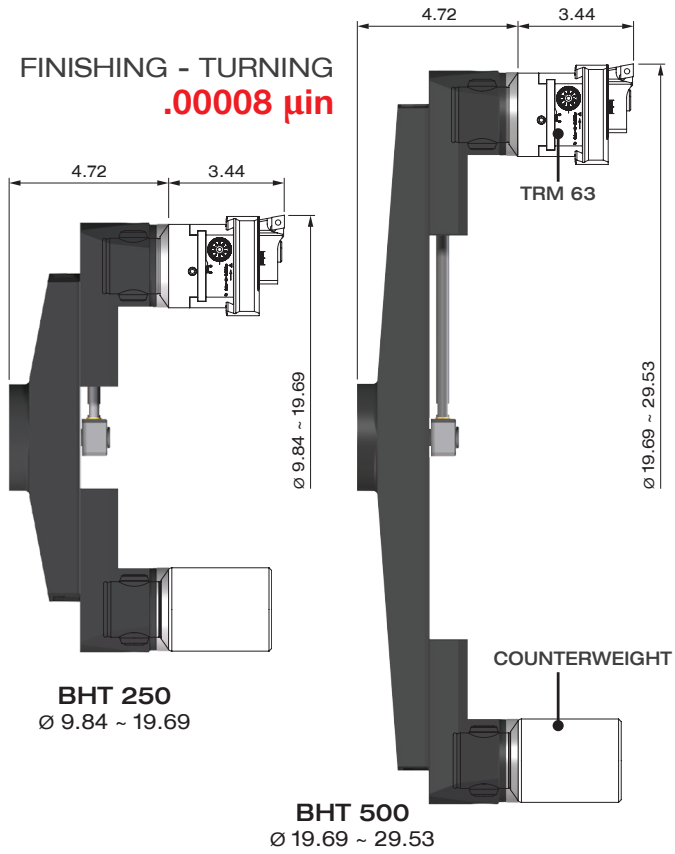

ISO-CA CARTRIDGE HOLDERS

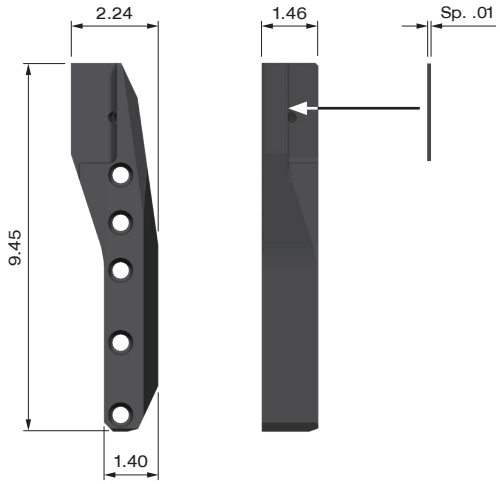

REF.	CODE	lb	
ISO-CA CARTRIDGE HOLDERS BHT 250-500	382090024000	5.51	$959.25

ADAPTER MHD'63

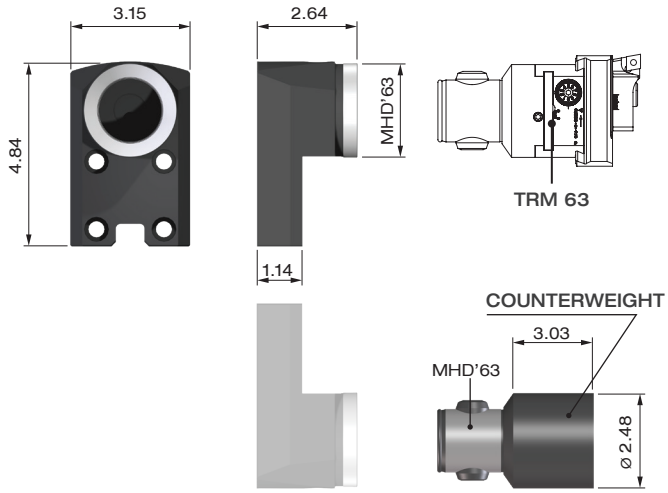

REF.	CODE	lb	
ADAPTER MHD'63 BHT 250-500	382090006301	5.51	$1,087.15
COUNTERWEIGHT MHD'63 BHT 250-500	392011006300	5.29	$473.23

COOLANT KIT

KIT RFG BHT 250 SG		
CODE	382090025000	$191.85

KIT RFG BHT 500 SG		
CODE	382090050003	$383.70

KIT RFG BHT 250 FN		
CODE	382090025001	$345.33

KIT RFG BHT 500 FN		
CODE	382090050004	$383.70

CARTRIDGES 20CA ISO 5611

PTGNL20CA-22	
CODE	483010201001
	TNM2204

PSRNL20CA-15	
CODE	483010201004
	SNM1506